Signature	Revision History	Date	Rev.
Alex.Dan	For Bulk Production	Dec.20,2005	01

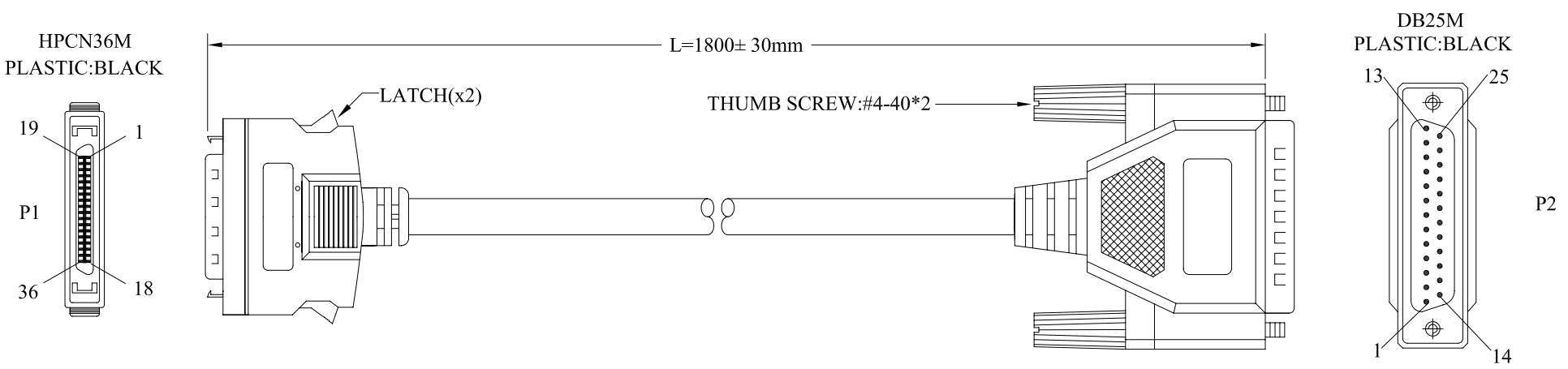

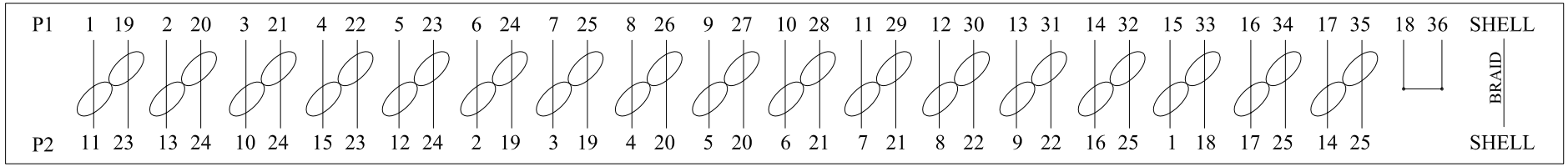

NOTES:

1.CABLE:UL-20276 28AWG(7/0.127 T.C)*18TP+INS:PP+AL/MYLAR+DRAIN WIRE
+BRAID(85%) JACKET:PVC OD:Ø7.5± 0.15mm COLOR:BEIGE.

2.CONNECTOR:
P1:HPCN36P MALE GOLD FLASH CONTACT,NICKEL PLATED SHELL .
P2:DB25P MALE GOLD FLASH CONTACT,NICKEL PLATED SHELL .

3.HOOD:P1&P2:MOLDED TYPE COLOR:BEIGE.

4.SHIELD:COPPER FOIL 360° SOLDERED TO CONNECTOR SHELL & CABLE BRAID.

5.ELECTRICAL TEST:100% OPEN SHORT MIS WIRE TEST.
CONTACT RESISTANCE 3 OHMS MAX.
INSULATION RESISTANCE 20M OHMS MIN.

6.PACKING:SEE P-0039 REV.C PACKING DRAWING.
PACKING TYPE: DB VP4.
(HANKING SIZE MUST BE SMALLER THAN PACKING).

RoHS Compliant

EAN Code: 4016032064572

	Date	Name
Drawn by	Dec.20,2005	Alex Dan
Checked by	Dec.20,2005	Norman Xu
Approved by		

ASSMANN
Electronic GmbH

ST81407

Part No.
AK 706 1.8M

Title.
HP CN36M/DB25M CABLE,1.8M

Scale	N/A	Sheet
Unit	MM	1/1