Signature	Revision History	Date	Rev.
Alex.Dan	For Bulk Production	Dec.20,2005	01

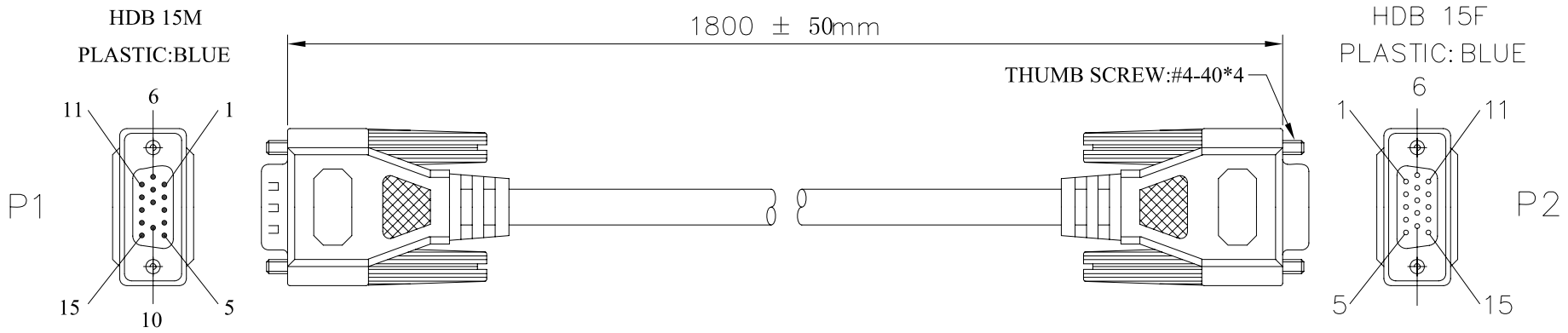

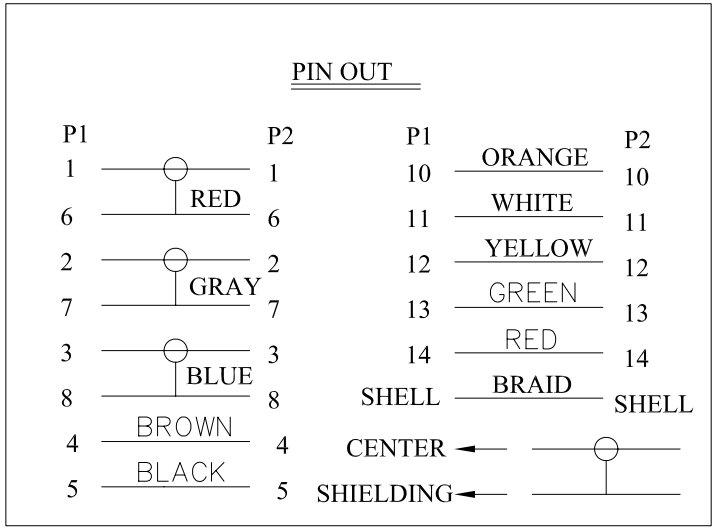

NOTES:

1. CABLE:28AWG(7/0.127 T.C)*3COAX(75 OHMS)+INSULATION:FO-PE+SPIRAL
   INNER JACKET:PVC OD: 2.5± 0.1mm(UL-1354)+28AWG(7/0.127 T.C)
   *7C+INSULATION:SR-PVC ID: 0.9± 0.05mm(UL-1061)+AL/MYLAR+DRAIN
   WIRE:26AWG(7/0.16 T.C)+BRAID SHIELD(85%)+OUTER JACKET:PVC
   COLOR:BEIGE, OD: 8.5± 0.15mm UL/CSA2919 APPROVED
2. CONNECTOR:
   P1:HDB 15P MALE,THE 9TH PIN IS EMPTY,GOLD FLASH CONTACT,
   NICKEL PLATED SHELL
   P2:HDB 15P FEMALE,GOLD FLASH CONTACT,NICKEL PLATED SHELL
4. SHIELD:P1 & P2 COPPER-FOIL 360° SOLDERED TO CONNECTOR SHELL & CABLE BRAID
5. HOOD:MOLDED TYPE,PVC 45P,COLOR:BEIGE.
6. ELECTRICAL TEST:
   <1>.100% OPEN SHORT & MIS WIRE TEST
   <2>.CONTACT RESISTANCE 3 OHMS MAX
   <3>.INSULATION RESISTANCE 20M OHMS MIN
7. PACKING:SEE P-0039 REV.C PACKING DRAWING
   (HANKING SIZE MUST BE SMALLER THAN BLISTER)

RoHS Compliant

EAN Code: 4016032063155

	Date	Name
Drawn by	Dec.20,2005	Alex Dan
Checked by	Dec.20,2005	Norman Xu
Approved by		

ASSMANN Electronic GmbH

ST81407

Part No.

AK 3220X

Title.

PREMIUM XGA MONITOR Connection Cable

Scale	N/A	Sheet
Unit	MM	1/1