Signature	Revision History	Date	Rev.
Alex.Dan	For Bulk Production	Dec.20,2006	01

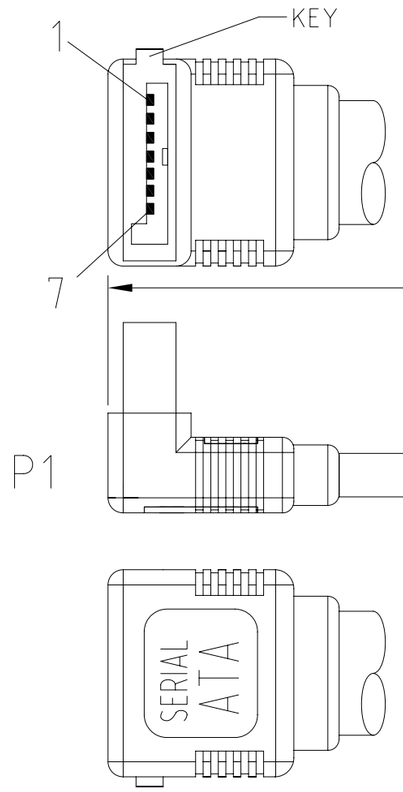

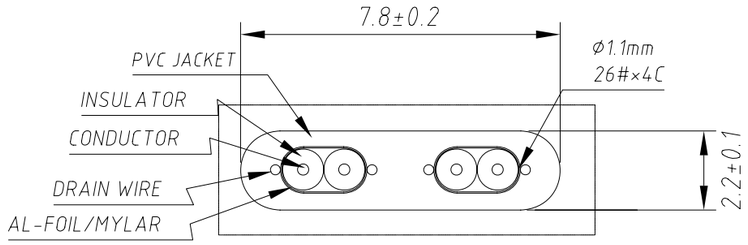

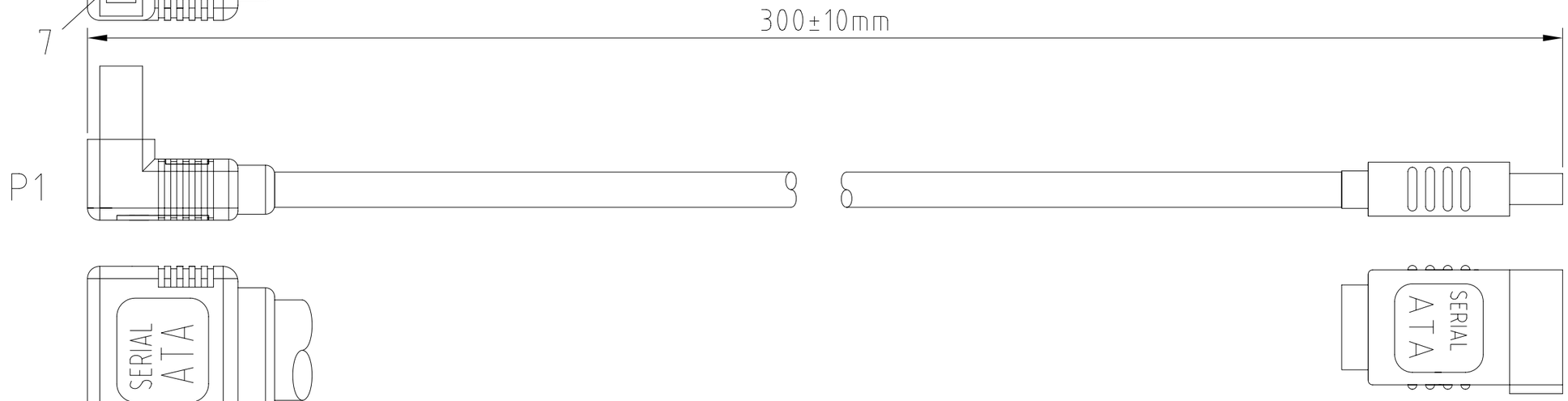

NOTE:

1. CABLE:
   UL2725 80°C 30V [26AWG(1/0.404)×2F+AL/MY+DRAIN WIRE(1/0.32)×2]TIN
   INS:FOAM-PE OD:Ø1.1±0.05mm
   PVC JACKET OD:Ø(2.2±0.1)×(7.8±0.2)mm COLOR:RED (PANTONE 200C)
   PRINT: 2725 E209329 UL AWM 80°C 30V VW-1 Serial ATA 26AWG
   IMPEDANCE: 100±5 OHM
2. CONNECTOR:
   2-1 MATERIAL:
   HOUSING: HIGH TEMPERATURE POLYESTER & GLASS FIBER UL 94V-0
   TERMINAL: COPPER ALLOY
   2-1 PLATING:
   CONTACT AREA: 15u" GOLD PLATED
3. HOOD: MOLDED TYPE, PVC 45P, COLOR:BLACK
4. CABLE ASS'Y ELECTRICAL TEST:
   4-1 100% OPEN SHORT & MIS WIRE TEST
   4-2 CONTACT RESISTANCE 2 OHM MAX
   4-3 INSULATION RESISTANCE 20M OHM MIN
5. PACKING: SEE P-0039 REV.C PACKING DRAWING

PIN ASSIGNMENT 1:1

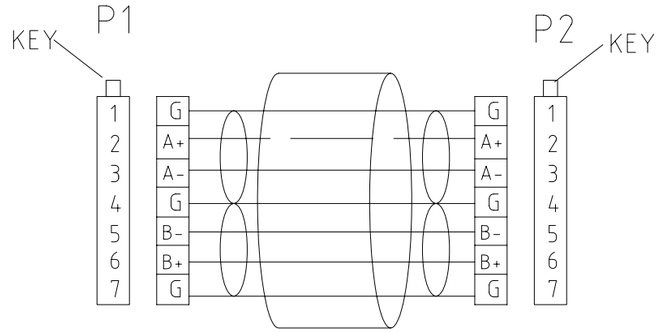

RoHS Compliant

EAN Code: 4016032154242

ST81407

	Date	Name
Drawn by	Dec.20,2006	Alex Dan
Checked by	Dec.20,2006	Norman Xu
Approved by		

ASSMANN Electronic GmbH

Part No.

AK-SATA-030DL

Title.

Serial ATA Connector Cable with left angled connector

Scale	N/A	Sheet
Unit	MM	1/1