Signature	Revision History	Date	Rev.
Alex.Dan	For Bulk Production	Dec.20,2006	01

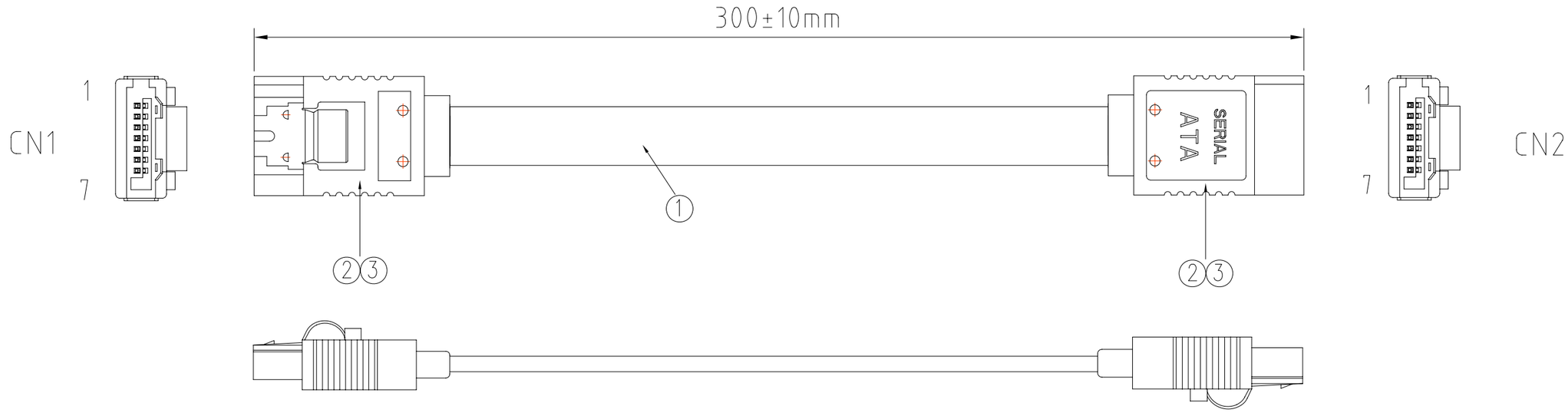

TEST:
1.100% OPEN&SHORT WITH MISS WIRE TEST
2.TEST CONDITION:
1).CONDUCTANCE RESISTANCE: 5 ohm
2).SHORT OPEN DETERMINANT: 20K ohm
3).INSULATION RESISTANCE: 5M ohm AT DC 300V.
3.PACKING:SEE P-0039 REV.C PACKING DRAWING

WIRE LIST:

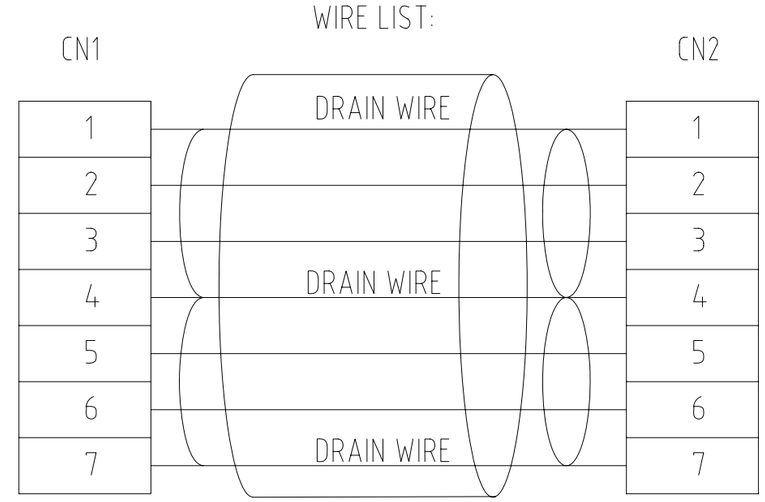

ITEM	DESCRIPTION	Q'TY
3	OUTER MOLD:35P PVC BLACK	A/R
2	SATA 7F 15u" BLACK 180° W/SPRING	2SETS
1	UL2725(26WG×2C+2D+AE)×2C RED(PANTONE 200C), OD:2.2×7.8mm	A/R

RoHS Compliant

EAN Code: 4016032183020

ST81407

	Date	Name
Drawn by	Dec.20,2006	Alex Dan
Checked by	Dec.20,2006	Norman Xu
Approved by		

ASSMANN Electronic GmbH

Part No.
AK-SATA-030-L

Title.
Serial ATA Connectioncable with metal latch

Scale	N/A	Sheet
Unit	MM	1/1